ITEM-50251

PART	PART NO.	QTY
	K13-00391L	1
	K13-00391R	1
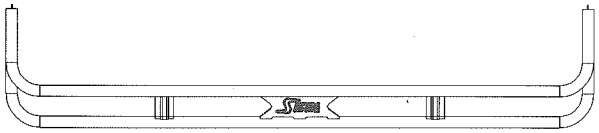	K13-00392	2
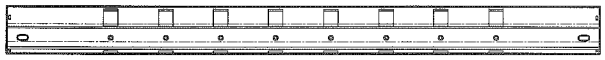	K11-00426	3
	K11-00335-R1	8
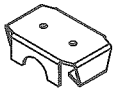	11-00453	2
	11-00655	2
		2

ASSEMBLY INSTRUCTIONS
for :

BUSHMAN SAFARI RACK

50201, 50231, 50241, & 50251

KARGO MASTER®

(916) 638-8703 **(800) 343-7486**

• 11261 Trade Center Drive • Rancho Cordova, CA 95742 •

KARGO MASTER®

For TECHNICAL SUPPORT Call:

1-800-343-7486

Monday- Friday 7:30 A.M. to 4:00 P.M. (PACIFIC)

RECOMMENDED TOOLS FOR ASSEMBLY

- 7/16" SOCKET or END WRENCH
- 8' TAPE MEASURE
- HAMMER
- GOOP
- ALLEN WRENCH (included)

HARDWARE KIT FOR BUSHMAN 42"

F	J	L	K	G	H	C
(10 ea.)	(4 ea.)	(4 ea.)	(4 ea.)	(10 ea.)	(10 ea.)	(8 ea.)
1" Square Plastic Plug	5/16" x 3/4" Carriage Bolt	5/16" Lock Nut	5/16" SAE Flat Washer	1/4" x 1" Button Head Bolt	Flange Nut	1/4" x 3/8" Button Head Bolt

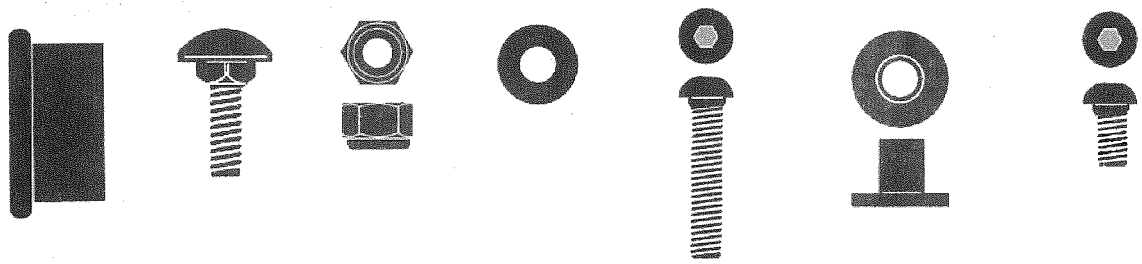

HARDWARE KIT FOR BUSHMAN 52"

F	J	L	K	G	H	G
(12 ea.)	(4 ea.)	(4 ea.)	(4 ea.)	(12 ea.)	(12 ea.)	(8 ea.)
1" Square Plastic Plug	5/16" x 3/4" Carriage Bolt	5/16" Lock Nut	5/16" SAE Flat Washer	1/4" x 1" Button Head Bolt	Flange Nut	1/4" x 3/8" Button Head Bolt

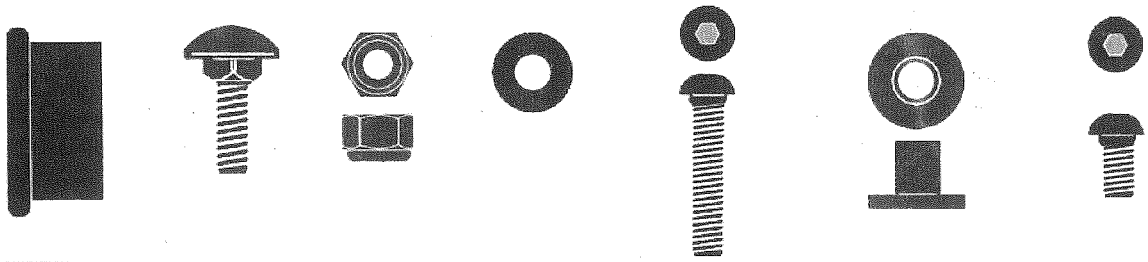

HARDWARE KIT FOR BUSHMAN 50251 ONLY 52"

F	J	L	K	G	H	C
(16 ea.)	(4 ea.)	(4 ea.)	(4 ea.)	(16 ea.)	(16 ea.)	(8 ea.)
1" Square Plastic Plug	5/16" x 3/4" Carriage Bolt	5/16" Lock Nut	5/16" SAE Flat Washer	1/4" x 1" Button Head Bolt	Flange Nut	1/4" x 3/8" Button Head Bolt

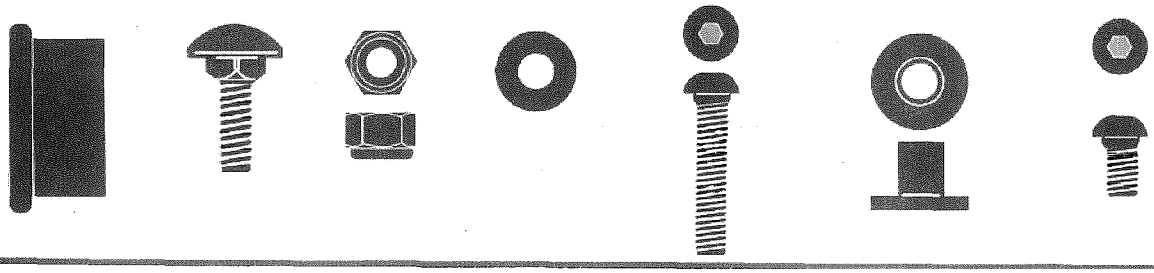

NOTICE: It is important to properly seal and bond all joints per diagram.

GOOP APPLICATION

Apply a healthy air tight bead of goop around **every** swaged joint as shown, to prevent moisture from leaking into and out of the joint. If this is not done properly, the inside surface of the tubes can rust and rusty water can leak out. Maintain this joint seal throughout the life of your rack.

Swaged joint & holes

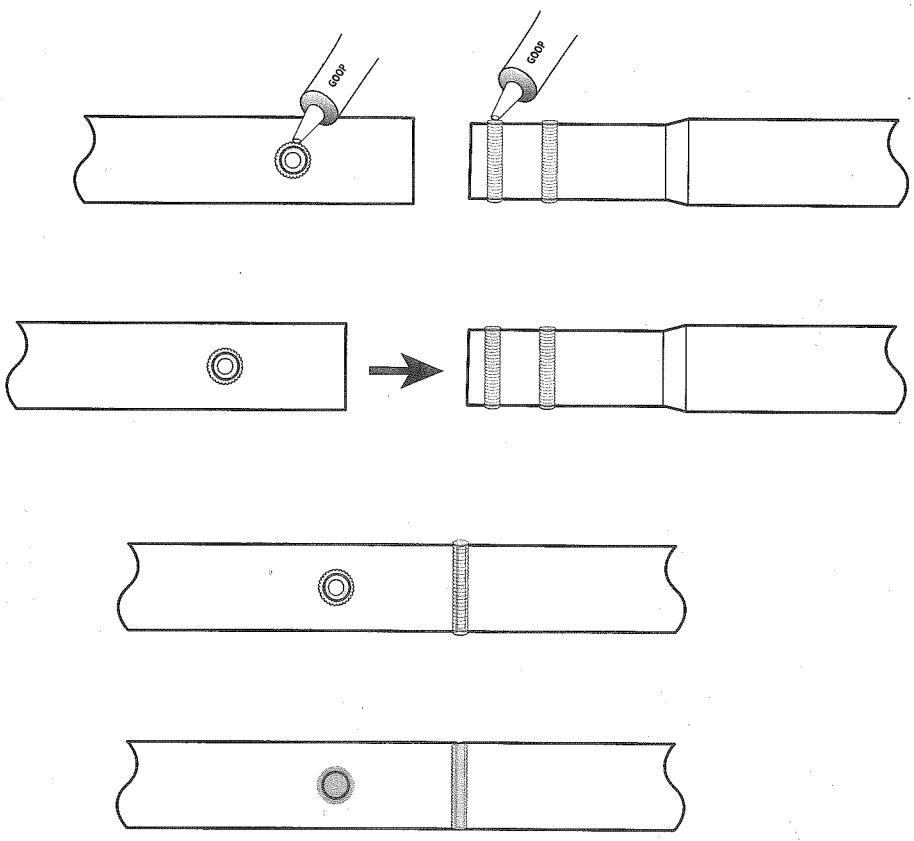

Smooth goop at swaged joint & holes

STEP 1

DIAGRAM #1

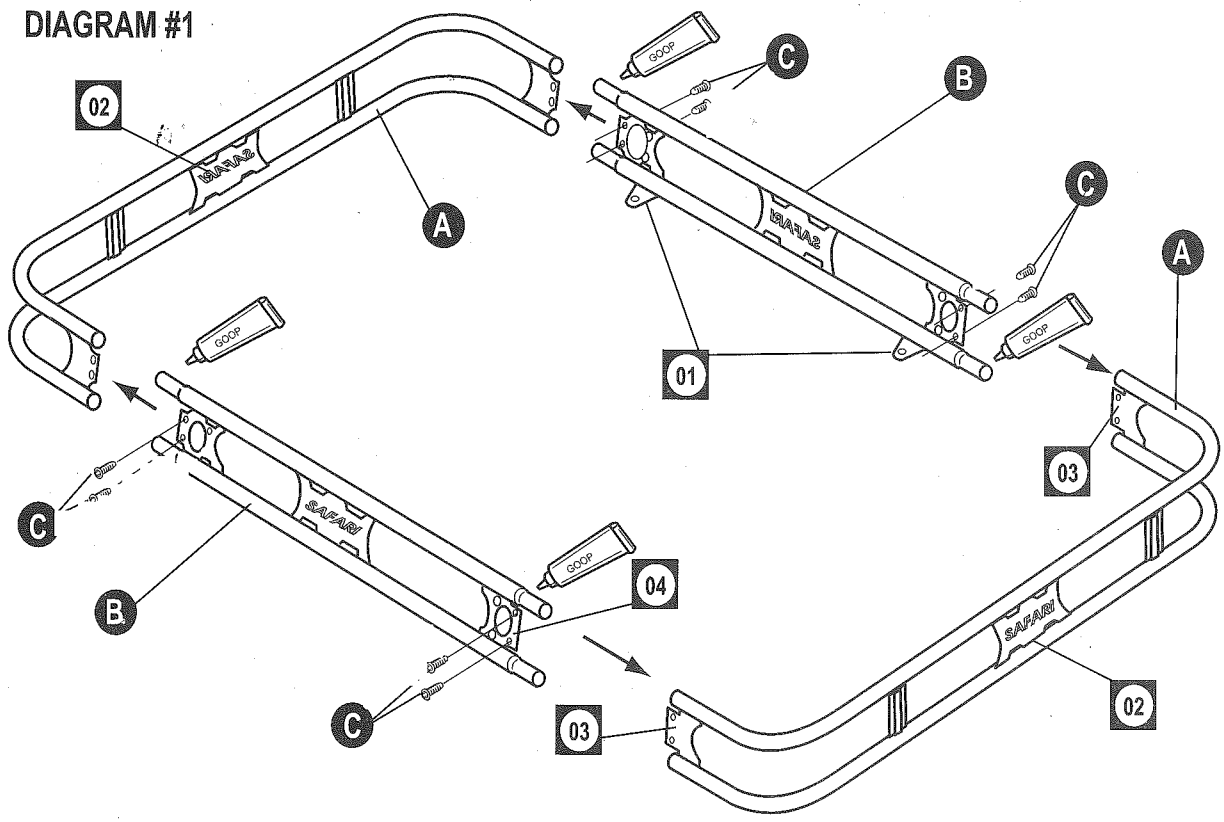

#1= First layout the basket tubes per Diagram #1. Position bent end sections **A** with "Safari Logo" **02** facing up and mounting tabs **01** on side sections **B** facing in, per Diagram. It is recommended to cover the entire joint surfaces with GOOP and then insert section **B** into section **A** positioning mounting flange **03** to the inside of flange **04**.
Align holes and start all eight screws **C** before final tightening to insure all holes are properly aligned.

STEP 2

DIAGRAM #2

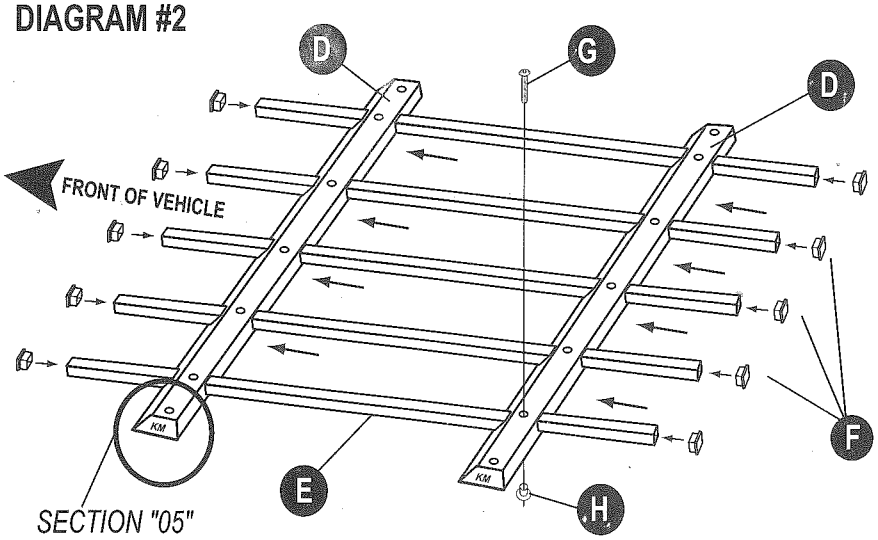

NOTE:

On Jeep sport bar mount racks (part no. 50031 or 50241) the distance from the flange nut hole to the end of the floor tube is not the same. Be sure the shorter distance is towards the front of the vehicle.

#1= Next insert floor tubes **E** through cross members **D** making sure tapered edges on *SECTION "05"* are facing the same direction. Align holes in tube **E** with holes in section **D** and insert button head bolts **G** and press nuts **H** into bottom of tubes **E**, (as per diagram) and tighten. Now insert plugs **F** into ends of floor tubes **E**, it is recommended to apply GOOP into the ends of the floor tubes before inserting.

STEP 3

DIAGRAM #3

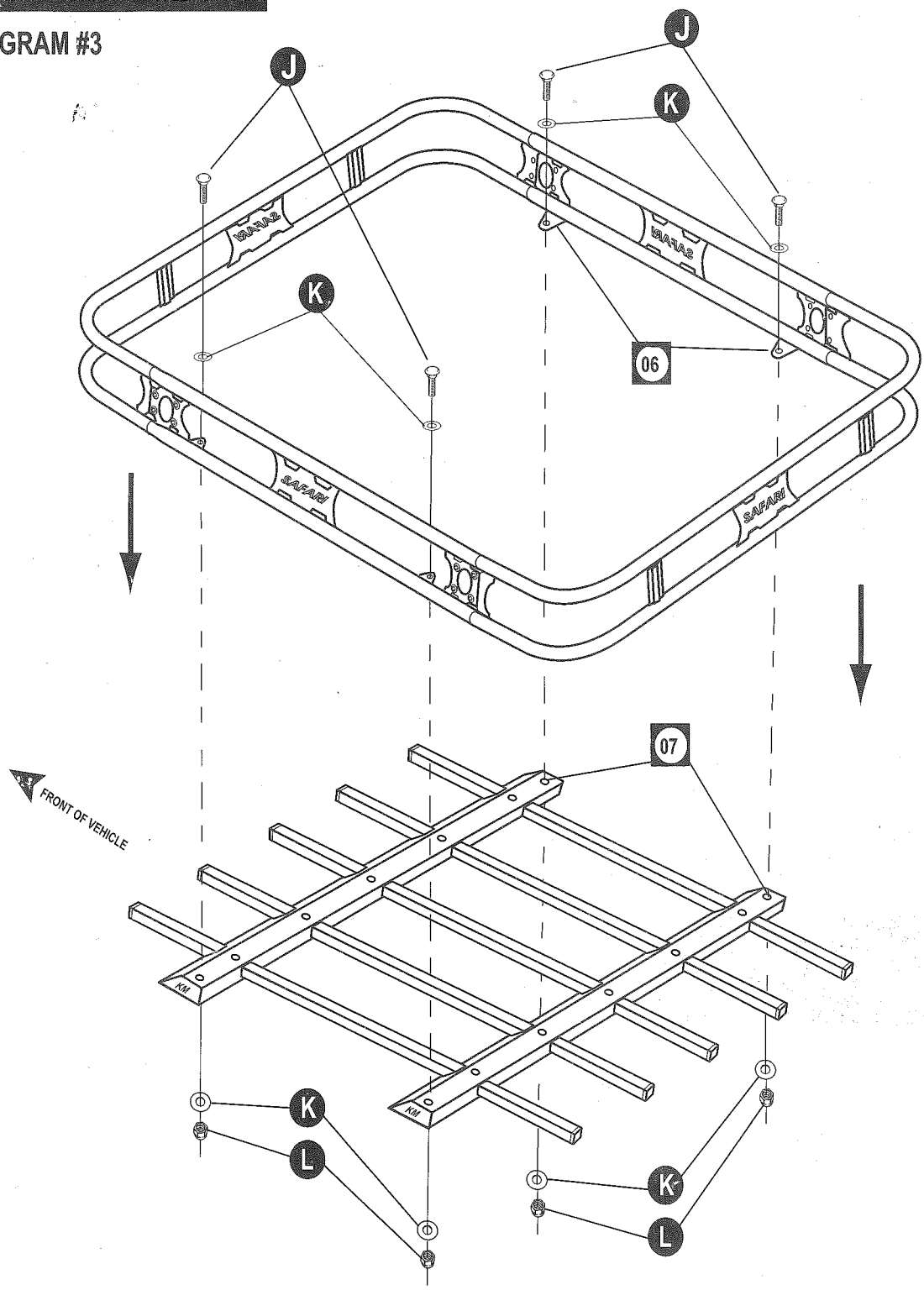

#1= Now set the basket down over the cross member floor assembly per Diagram #3. Align holes of basket mounting flange **06** with slot in tube **07**. Insert carriage bolts **J**, through cross member with flat washer **K** and lock nut **L**. Center basket on floor assembly and tighten. Now you are ready to install your mounting hardware.

MOUNTING INSTRUCTIONS ARE SEPARATE.

NOTICE ! IT IS IMPORTANT TO PROPERLY SEAL & BOND ALL JOINTS PER DIAGRAM

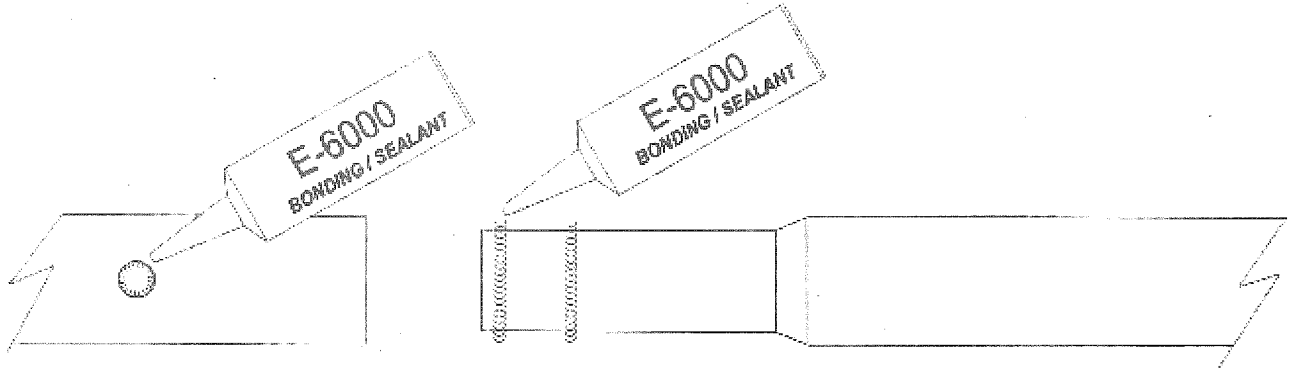

#1 *APPLY A LARGE BEAD OF BONDING GEL TO SWAGE END AND FIIL HOLES AS SHOWN*

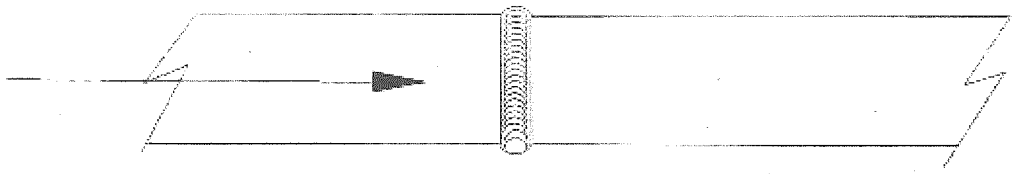
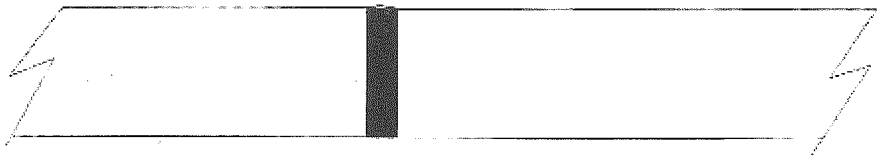
#2 *INSERT TUBE AND WIPE EXCESS FROM SURFACE*