METALCLOAK
INSTALLATION INSTRUCTIONS

PRODUCT: **Bronco Muffler Skid Plate**

REV: A | 04-27-2022 | II-B0401

READ INSTRUCTIONS IN FULL BEFORE INSTALLATION.

QUESTIONS? CALL 916-631-8071 M-F 7:00 AM – 5:00 PM PST

The MetalCloak experience includes the ease of installation of our products. We design for most contingencies, but installation may be different based on different Bronco condition, configuration and/or year.

We are continually trying to improve our products and instructions – please help us by providing feedback and pictures if you find any part of the instructions that do not match your Bronco or are not easily understandable.

If you have any difficulties at all, please give us a call. Thank you and enjoy your MetalCloak Products!

IMPORTANT NOTE: We use Stainless Steel Hardware where possible. Therefore, a tube of Silver Anti-seize is provided and should be used on all bolts—only a small amount is needed.

WARRANTY INFORMATION: This article is sold without warranty expressed or implied. No warranty or representation is made as to this products ability to protect the user from injury or death. The user assumes that risk. The effectiveness, warranty and longevity of this equipment are directly related to the manner in which it is INSTALLED, USED and/or MAINTAINED. THE USER ASSUMES ALL RISK. By purchasing this product and opening the packaging, purchasers expressly acknowledge, understand and agree that they take, select and purchase these MetalCloak products from Armored Works, LLC, its affiliates and distributors and agents as is and with all faults. The entire risk as to the quality and performance of these MetalCloak products is with the purchaser. Working on your vehicle can be a dangerous activity. If you are unsure of what you are doing, please leave mechanical or safety critical work to a skilled mechanic. We take no responsibility for the incorrect use and/or installation of MetalCloak products.

Section 1: Tools & Notes on Installation

Tools Required:

Socket & Ratchet Wrench

9/16 Socket
18MM Socket
19MM Socket

9/16” Box Wrench

HOW TO USE THIS GUIDE: The installation guide contains ALL steps for installation. Please read and follow the instructions in order of each page top to bottom and left to right.
Model: Instructions may apply to multiple Bronco models but are labeled separately where appropriate.
Options: Because of the number of component options we offer, these instructions may contain steps that will not match your particular configuration. You can skip these steps.
Images: Pictures are provided, and parts are labeled throughout the instructions. Each text box contains guidance based on the pictures next to it. The text will refer to alphabetical labels (A, B, etc.) found in the images.
Installation Notes: Terms may be used in the body of the instructions that you may not be familiar with, if you have any questions feel free to contact us at the number below, or email techhelp@metalcloak.com
QUESTIONS: Any questions or comments about the instructions? Call us at 916-631-8071 M-F 7:00 AM – 5:00 PM PST.

 Copyright 2011 Armored Works, LLC

Section 2: Product Components

DC-0001 Rev B

SHEET 1 OF 1

ITEM	PART NUMBER/DESCRIPTION	QTY.
1	CB-0018 HANGER, MUFFLER SKID, BRONCO	1
2	CB-0018-P HANGER, MUFFLER SKID, BRONCO	1
3	WM-7509 WELDMENT, MUFFLER SKID, BRONCO	1
4	WM-7511 WELDMENT, NUT PLATE, MUFFLER SKID, BRONCO	2
	HK-B0401 [INTERNAL]	
5	FS-06029 WASHER, 0.39ID X 0.63OD X 0.06TH SS 18-8	4
6	FS-06031 HHCS, 0.38-16 X 1.0L STL G5 ZINC	4
7	FS-06143 TOPLOCK NUT, 0.38-16 X 0.33H STL GC CAD	4
8	FS-08061 HHCS, 0.5-13 X 1.25L STL G8 ZINC	2

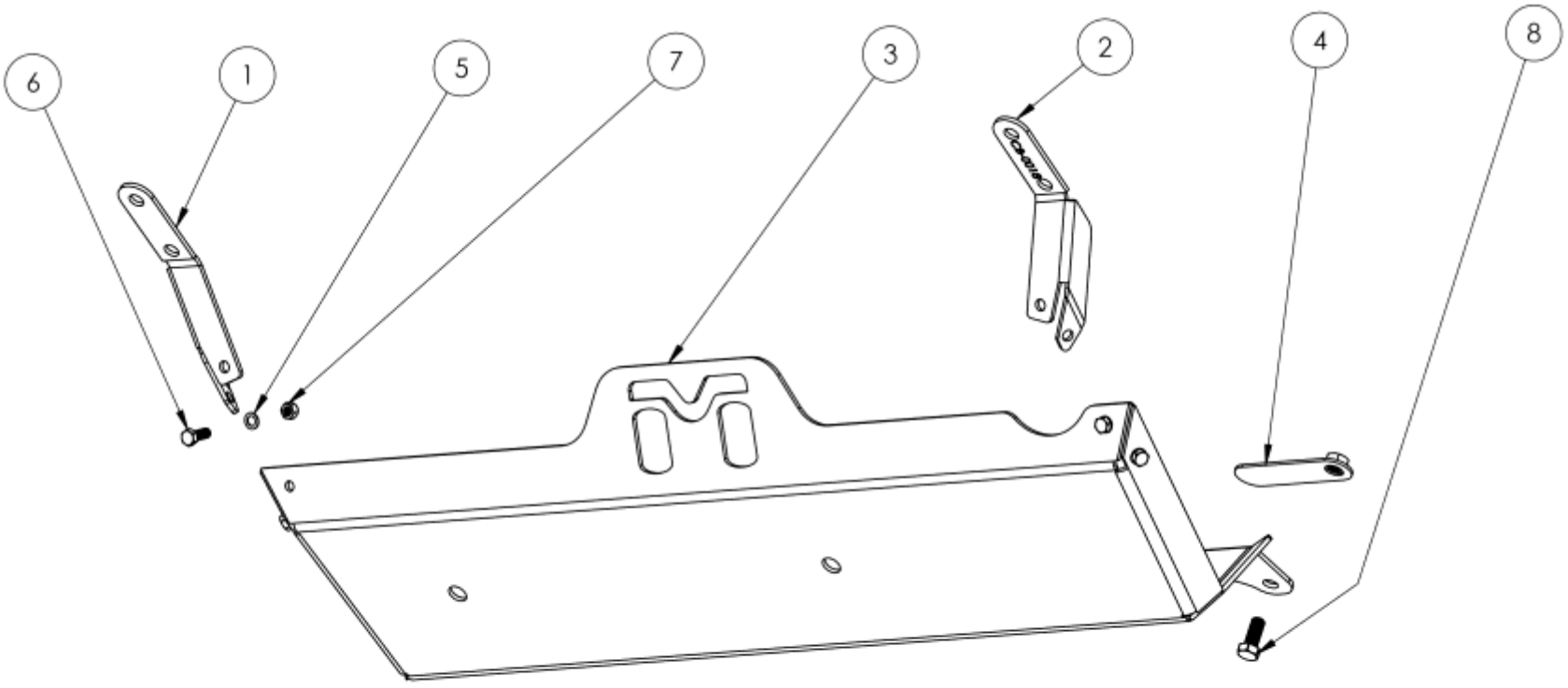

THE INFORMATION CONTAINED ON THIS DRAWING IS THE EXCLUSIVE PROPERTY OF ARMORED WORKS, LLC. UNAUTHORIZED REPRODUCTION IS PROHIBITED.
DO NOT SCALE DRAWING

METAL CLOAK
A DIVISION OF ARMORED WORKS, LLC

PART NUMBER/DESCRIPTION

B0401 MUFFLER SKID, BRONCO

Section 3: Installation Instructions

Step 1: Preparation for Muffler Skid Installation.

A. Loosely install the muffler skid hangers to the muffler skid with the provided hardware *(bolt, washer, and nut)* with a 9/16” socket and wrench.

B. Using a 18mm socket remove the stock bolts from the recovery points located under the rear bumper. **Save Hardware.**

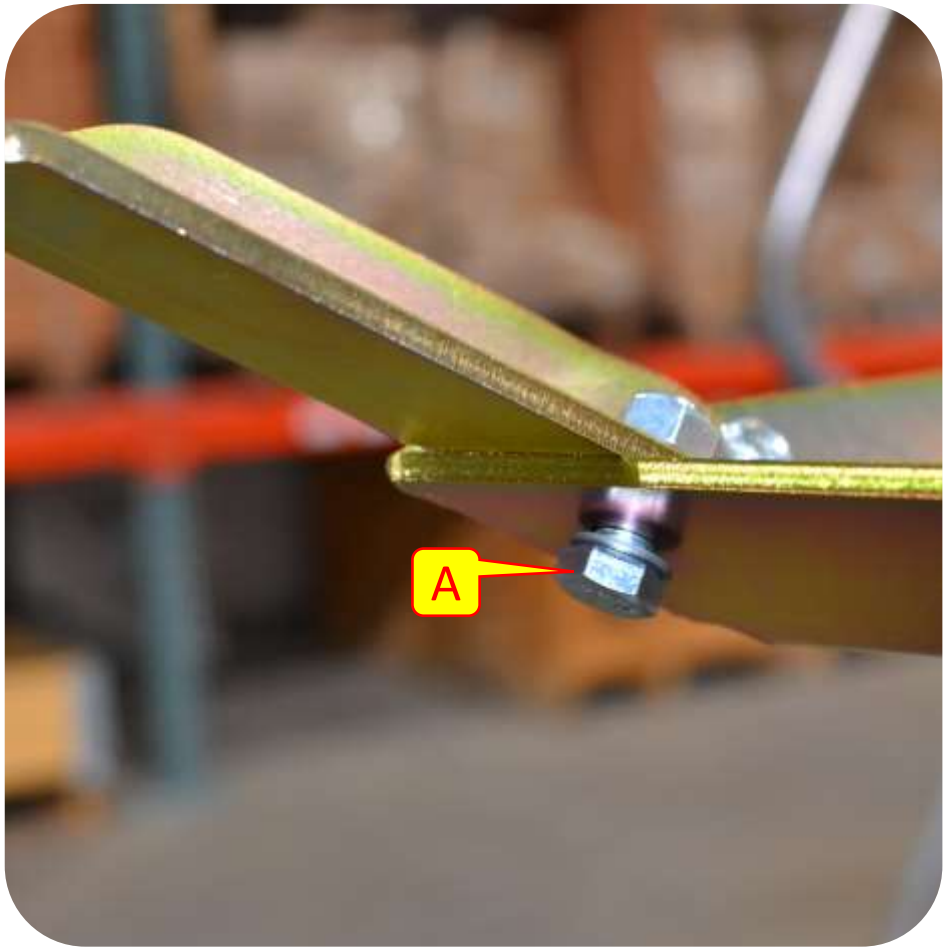

 Copyright 2011 Armored Works, LLC

Section 3: Installation Instructions

Step 2: Install the Muffler Skid Plate

C. Using the stock recovery point hardware loosely install the muffler skid hangers in between the frame and the factory recovery points.

D. Slide the nut plates into the cross member, placing the nut over the mounting hole locations on the muffler skid.

E. Install the provided hardware through the muffler skid and into the nut plates using a 19mm socket.

F. Tighten down all bolts.

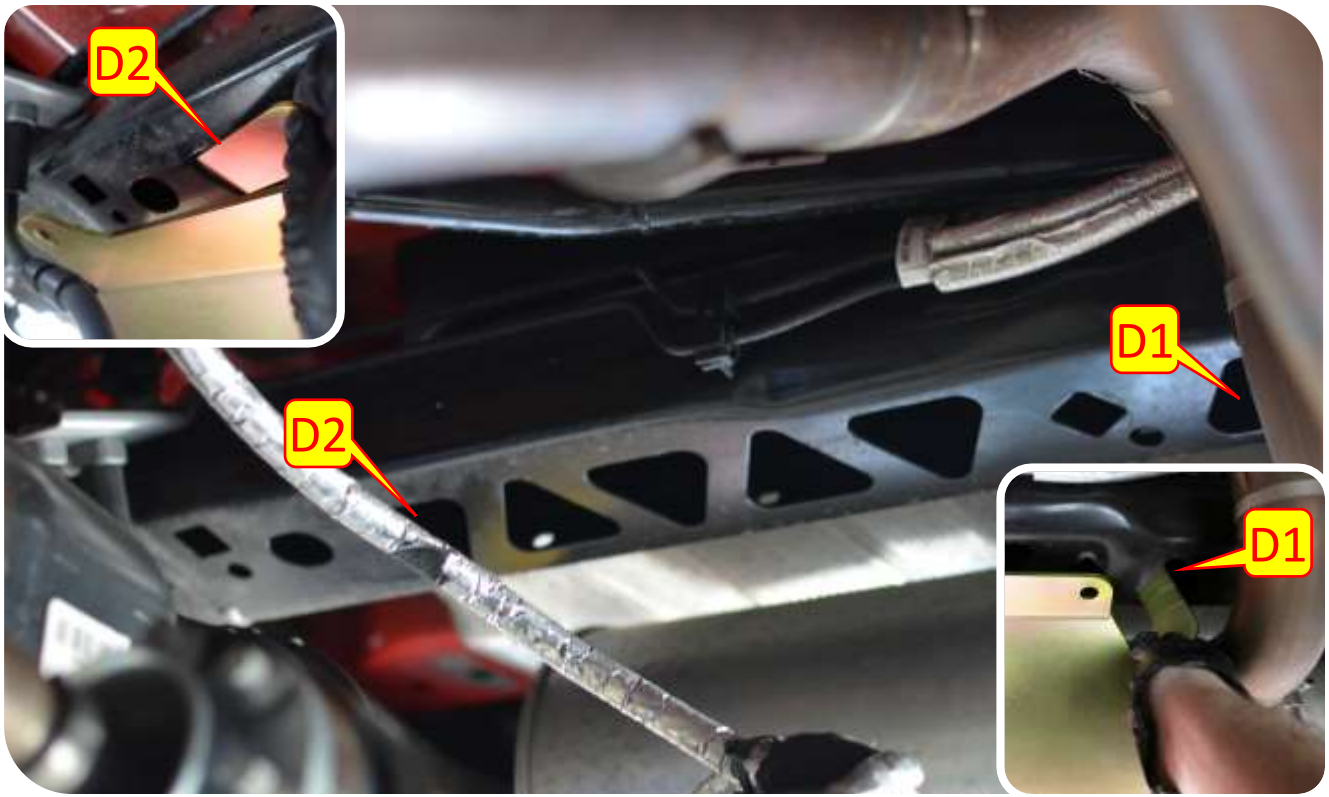

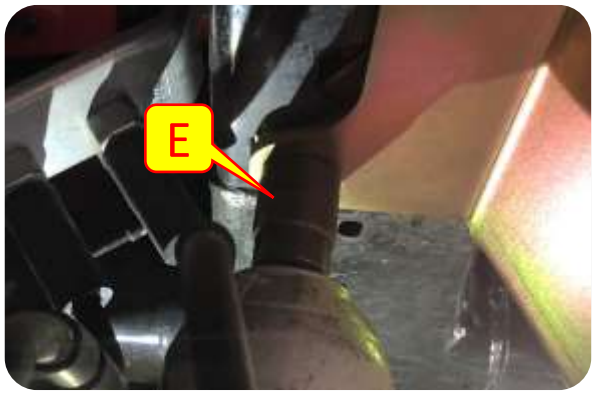

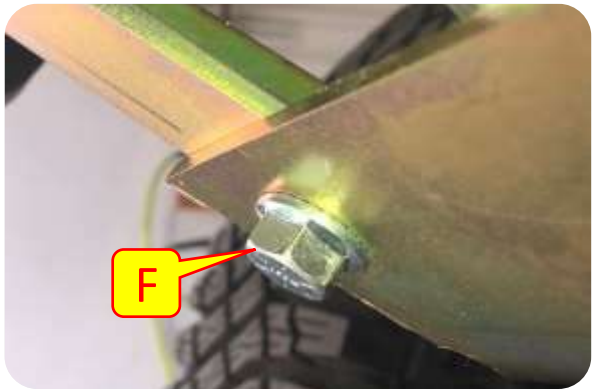

 Copyright 2011 Armored Works, LLC